Cambridge Assessment International Education

Cambridge International AS & A Level

CANDIDATE NAME

CENTRE NUMBER

CANDIDATE NUMBER

5995040741

PHYSICS **9702/42**

Paper 4 A Level Structured Questions **May/June 2020**

2 hours

You must answer on the question paper.

No additional materials are needed.

INSTRUCTIONS

- Answer **all** questions.
- Use a black or dark blue pen. You may use an HB pencil for any diagrams or graphs.
- Write your name, centre number and candidate number in the boxes at the top of the page.
- Write your answer to each question in the space provided.
- Do **not** use an erasable pen or correction fluid.
- Do **not** write on any bar codes.
- You may use a calculator.
- You should show all your working and use appropriate units.

INFORMATION

- The total mark for this paper is 100.
- The number of marks for each question or part question is shown in brackets [ ].

This document has **20** pages. Blank pages are indicated.

© UCLES 2020

[Turn over

Data

speed of light in free space	$c = 3.00 \times 10^{8}\,\text{m s}^{-1}$
permeability of free space	$\mu_0 = 4\pi \times 10^{-7}\,\text{H m}^{-1}$
permittivity of free space	$\varepsilon_0 = 8.85 \times 10^{-12}\,\text{F m}^{-1}$
	$(\frac{1}{4\pi\varepsilon_0} = 8.99 \times 10^{9}\,\text{m F}^{-1})$
elementary charge	$e = 1.60 \times 10^{-19}\,\text{C}$
the Planck constant	$h = 6.63 \times 10^{-34}\,\text{J s}$
unified atomic mass unit	$1\,\text{u} = 1.66 \times 10^{-27}\,\text{kg}$
rest mass of electron	$m_e = 9.11 \times 10^{-31}\,\text{kg}$
rest mass of proton	$m_p = 1.67 \times 10^{-27}\,\text{kg}$
molar gas constant	$R = 8.31\,\text{J K}^{-1}\,\text{mol}^{-1}$
the Avogadro constant	$N_A = 6.02 \times 10^{23}\,\text{mol}^{-1}$
the Boltzmann constant	$k = 1.38 \times 10^{-23}\,\text{J K}^{-1}$
gravitational constant	$G = 6.67 \times 10^{-11}\,\text{N m}^2\,\text{kg}^{-2}$
acceleration of free fall	$g = 9.81\,\text{m s}^{-2}$

© UCLES 2020

Formulae

uniformly accelerated motion	$s = ut + \frac{1}{2}at^2$ $v^2 = u^2 + 2as$
work done on/by a gas	$W = p\Delta V$
gravitational potential	$\phi = -\frac{Gm}{r}$
hydrostatic pressure	$p = \rho gh$
pressure of an ideal gas	$p = \frac{1}{3}\frac{Nm}{V}\langle c^2 \rangle$
simple harmonic motion	$a = -\omega^2 x$
velocity of particle in s.h.m.	$v = v_0 \cos \omega t$ $v = \pm \omega\sqrt{(x_0^2 - x^2)}$
Doppler effect	$f_o = \frac{f_s v}{v \pm v_s}$
electric potential	$V = \frac{Q}{4\pi\varepsilon_0 r}$
capacitors in series	$1/C = 1/C_1 + 1/C_2 + \ldots$
capacitors in parallel	$C = C_1 + C_2 + \ldots$
energy of charged capacitor	$W = \frac{1}{2}QV$
electric current	$I = Anvq$
resistors in series	$R = R_1 + R_2 + \ldots$
resistors in parallel	$1/R = 1/R_1 + 1/R_2 + \ldots$
Hall voltage	$V_H = \frac{BI}{ntq}$
alternating current/voltage	$x = x_0 \sin \omega t$
radioactive decay	$x = x_0 \exp(-\lambda t)$
decay constant	$\lambda = \frac{0.693}{t_{\frac{1}{2}}}$

© UCLES 2020

[Turn over

Answer **all** the questions in the spaces provided.

1 **(a)** Define *gravitational potential* at a point.

.....

.....

..... [2]

(b) An isolated solid sphere of radius r may be assumed to have its mass M concentrated at its centre. The magnitude of the gravitational potential at the surface of the sphere is ϕ.

On Fig. 1.1, show the variation of the gravitational potential with distance d from the centre of the sphere for values of d from $d = r$ to $d = 4r$.

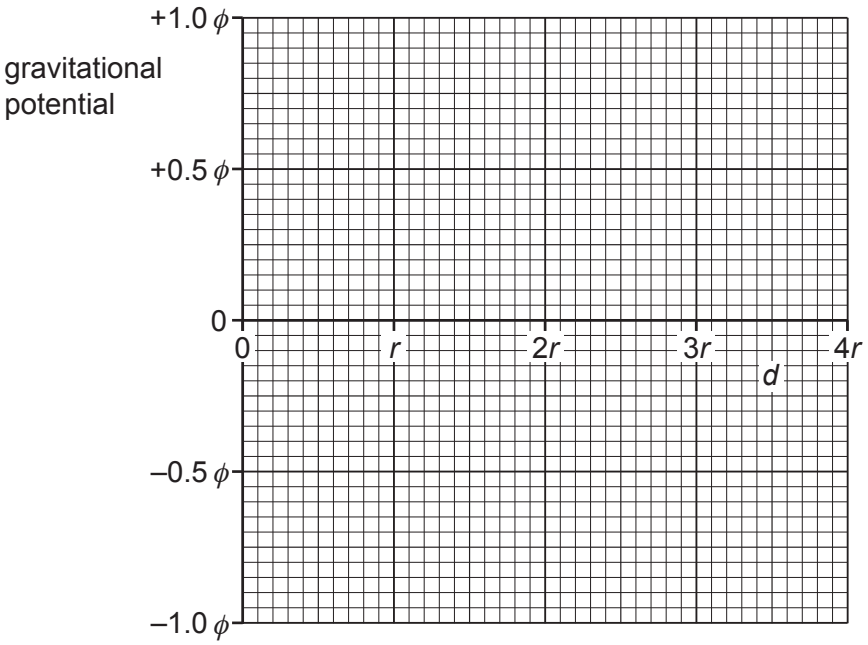

Fig. 1.1

[3]

(c) The sphere in **(b)** is a planet with radius r of 6.4×10^6 m and mass M of 6.0×10^{24} kg. The planet has no atmosphere.

A rock of mass 3.4×10^3 kg moves directly towards the planet. Its distance from the centre of the planet changes from $4r$ to $3r$.

(i) Calculate the change in gravitational potential energy of the rock.

change = ... J [3]

(ii) Explain whether the rock's speed increases, decreases or stays the same.

.....

..... [2]

[Total: 10]

2 **(a)** A square box of volume V contains N molecules of an ideal gas. Each molecule has mass m.

Using the kinetic theory of ideal gases, it can be shown that, if all the molecules are moving with speed v at right angles to one face of the box, the pressure p exerted on the face of the box is given by the expression

$$pV = Nmv^2. \qquad \text{(equation 1)}$$

This expression leads to the formula

$$p = \frac{1}{3}\rho\langle c^2\rangle \qquad \text{(equation 2)}$$

for the pressure p of an ideal gas, where ρ is the density of the gas and $\langle c^2\rangle$ is the mean-square speed of the molecules.

Explain how each of the following terms in equation 2 is derived from equation 1:

ρ: .....

.....

$\frac{1}{3}$: .....

.....

$\langle c^2\rangle$: .....

.....

[4]

(b) An ideal gas has volume, pressure and temperature as shown in Fig. 2.1.

volume $6.0 \times 10^{-3}\,m^3$
pressure $3.0 \times 10^5\,Pa$
temperature 17 °C

Fig. 2.1

The mass of the gas is 20.7 g.

Calculate the mass of one molecule of the gas.

mass = ... g [4]

[Total: 8]

© UCLES 2020

3 By reference to the first law of thermodynamics, state and explain the change, if any, in the internal energy of:

(a) a lump of solid lead as it melts at constant temperature

.....

.....

.....

.....

..... [3]

(b) some gas in a toy balloon when the balloon bursts and no thermal energy enters or leaves the gas.

.....

.....

.....

.....

..... [3]

[Total: 6]

4 A dish is made from a section of a hollow glass sphere.

The dish, fixed to a horizontal table, contains a small solid ball of mass 45 g, as shown in Fig. 4.1.

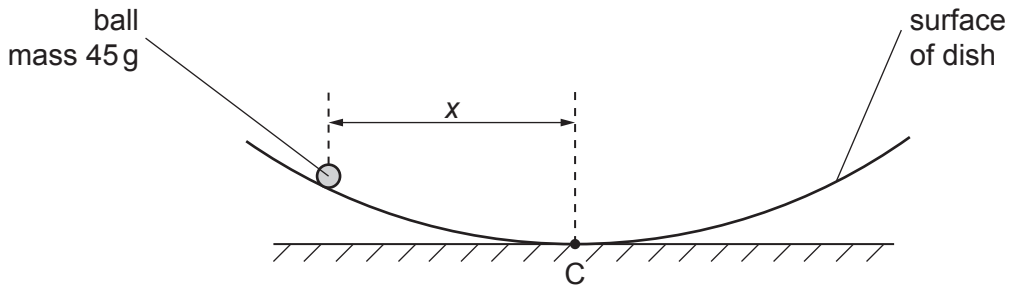

Fig. 4.1

The horizontal displacement of the ball from the centre C of the dish is x.

Initially, the ball is held at rest with distance x = 3.0 cm.

The ball is then released. The variation with time t of the horizontal displacement x of the ball from point C is shown in Fig. 4.2.

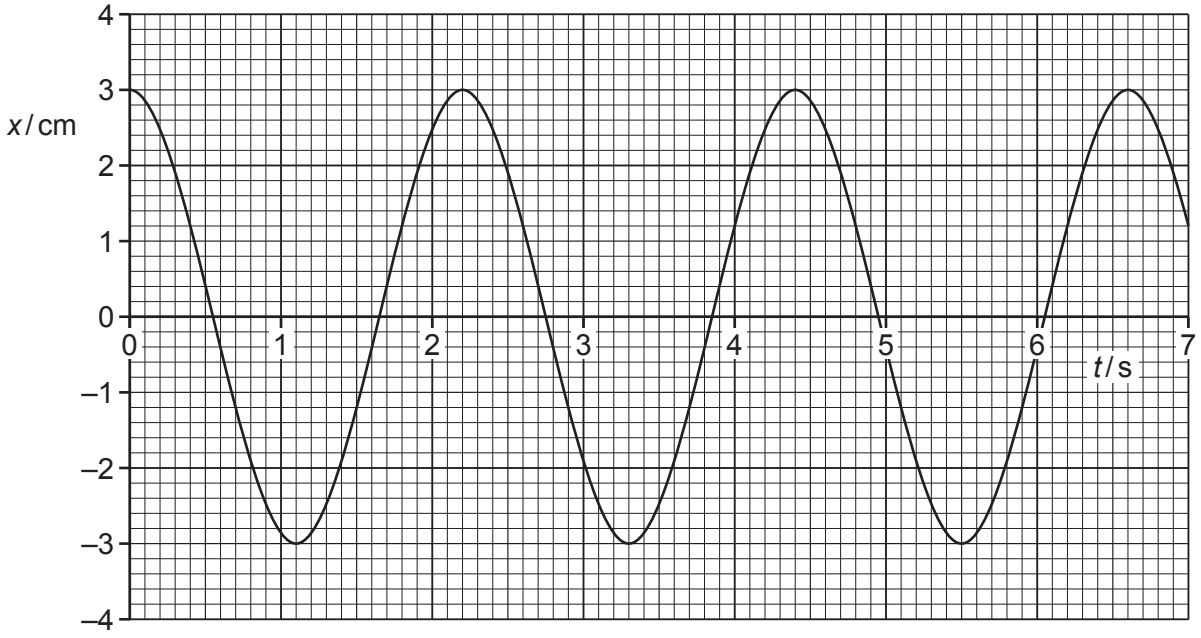

Fig. 4.2

The motion of the ball in the dish is simple harmonic with its acceleration a given by the expression

$$a = -\left(\frac{g}{R}\right)x$$

where g is the acceleration of free fall and R is a constant that depends on the dimensions of the dish and the ball.

© UCLES 2020

(a) Use Fig. 4.2 to show that the angular frequency ω of oscillation of the ball in the dish is $2.9\,\text{rad}\,\text{s}^{-1}$.

[1]

(b) Use the information in **(a)** to:

(i) determine R

R = ... m [2]

(ii) calculate the speed of the ball as it passes over the centre C of the dish.

speed = ... $\text{m}\,\text{s}^{-1}$ [2]

(c) Some moisture collects on the surface of the dish so that the motion of the ball becomes lightly damped.

On the axes of Fig. 4.2, draw a line to show the lightly damped motion of the ball for the first 5.0 s after the release of the ball. [3]

[Total: 8]

5 **(a)** Explain the principles of the **detection** of ultrasound waves for medical diagnosis.

.....

.....

.....

.....

.....

.....

.....

..... [4]

(b) By reference to specific acoustic impedance, explain why there is very little transmission of ultrasound waves from air into skin.

.....

.....

.....

.....

.....

..... [3]

[Total: 7]

© UCLES 2020

6 **(a)** Telephone signals may be transmitted either by means of an optic fibre or by means of a wire pair.

State **three** advantages of the use of an optic fibre rather than a wire pair.

1. .....

.....

2. .....

.....

3. .....

.....

[3]

(b) It is proposed to transmit a signal over a distance of 4.5×10^3 km by means of an optic fibre.

The input signal has a power of 9.8 mW.

The minimum signal that can be detected at the output has a power of 6.3×10^{-17} W. For this signal power, the signal-to-noise ratio is 21 dB.

Calculate:

(i) the power of the background noise

power = ... W [2]

(ii) the maximum attenuation per unit length of the optic fibre that allows for uninterrupted transmission of the signal.

attenuation per unit length = ... dB km^{-1} [2]

[Total: 7]

7 A metal sphere of radius R is isolated in space.

Point P is a distance x from the centre of the sphere, as illustrated in Fig. 7.1.

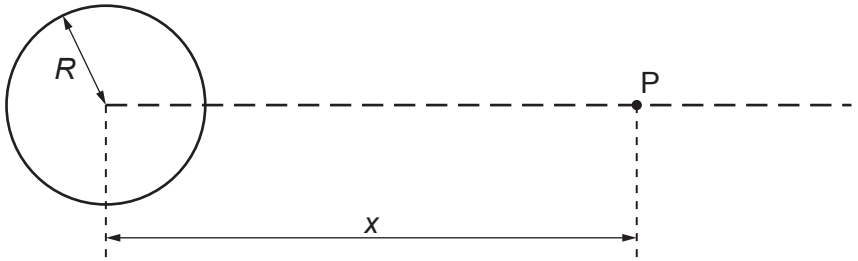

Fig. 7.1

The variation with distance x of the electric field strength E due to the charge on the sphere is shown in Fig. 7.2.

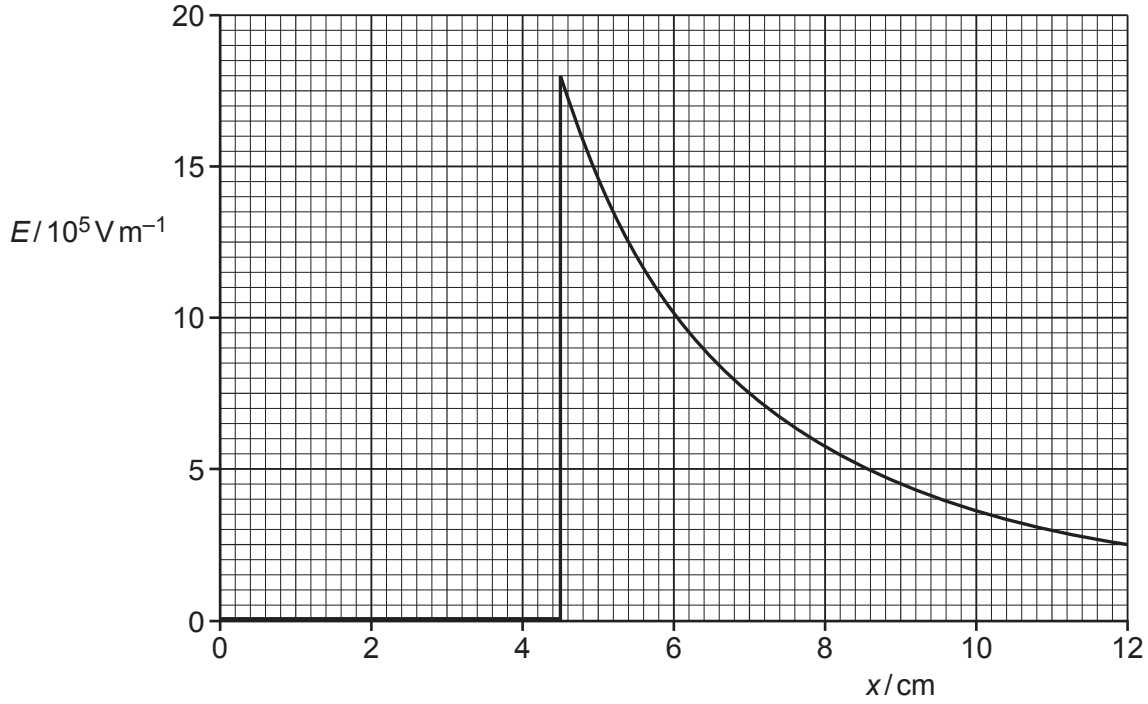

Fig. 7.2

(a) State what is meant by *electric field strength*.

.....

.....

..... [2]

(b) (i) Use Fig. 7.2 to determine the radius R of the sphere. Explain your working.

R = ... cm [2]

(ii) Use Fig. 7.2 to determine the charge Q on the sphere.

Q = ... C [3]

(c) An α-particle is situated a distance 8.0 cm from the centre of the sphere.

Calculate the acceleration of the α-particle.

acceleration = ... $m\,s^{-2}$ [3]

[Total: 10]

8 **(a)** An ideal operational amplifier (op-amp) is connected to a load resistor.
The op-amp is assumed to have infinite bandwidth and zero output resistance.

State:

(i) what is meant by *infinite bandwidth*

.....

..... [1]

(ii) the effect, if any, on the output voltage of increasing the load resistance.

.....

..... [1]

(b) A student designs the circuit shown in Fig. 8.1 in order to indicate changes in temperature of the thermistor T.

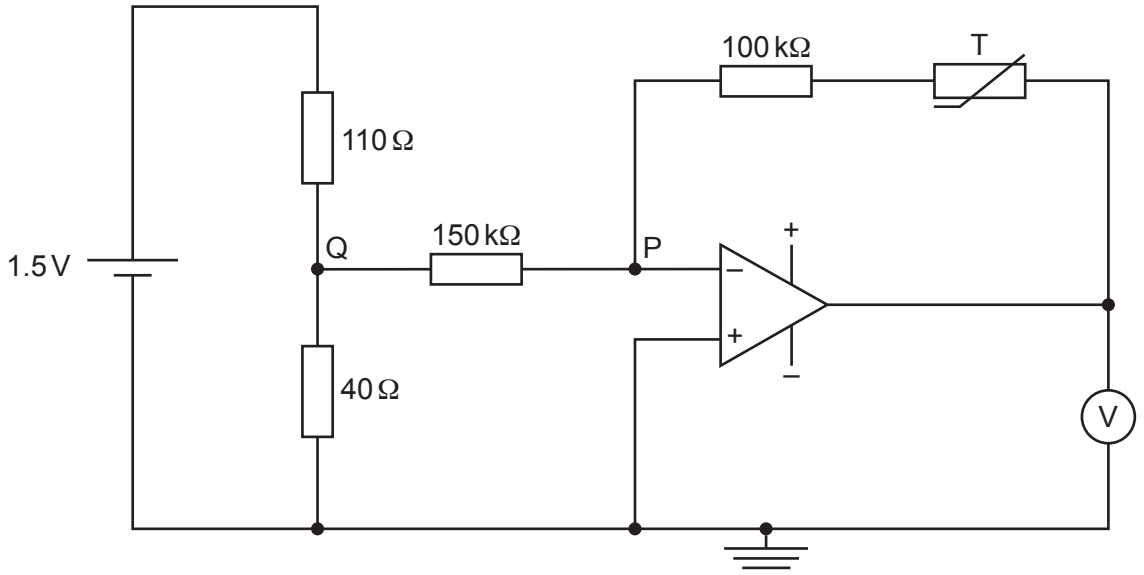

Fig. 8.1

(i) Explain why point P is known as a *virtual earth*.

.....

.....

.....

..... [3]

(ii) Calculate the potential at point Q.

potential = ... V [2]

(iii) At a temperature of 13 °C, the resistance of the thermistor T is 230 kΩ.

Show that the potential difference measured with the voltmeter is 0.88 V.

[2]

(c) The resistance of the thermistor T in **(b)** decreases as its temperature rises.

Explain the effect of this change in temperature on the potential difference measured with the voltmeter.

.....

.....

..... [2]

[Total: 11]

9 **(a)** An electron is travelling at speed v in a straight line in a vacuum. It enters a uniform magnetic field of flux density 8.0×10^{-4} T. Initially, the electron is travelling at right angles to the magnetic field, as illustrated in Fig. 9.1.

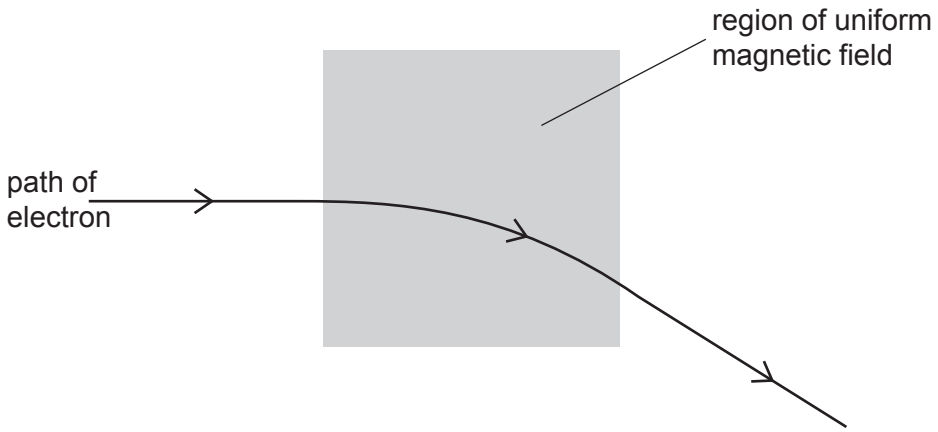

Fig. 9.1

The path of the electron in the magnetic field is an arc of a circle of radius 6.4 cm.

(i) State and explain the direction of the magnetic field.

.....

.....

..... [2]

(ii) Show that the speed v of the electron is $9.0 \times 10^{6}\,\text{m s}^{-1}$.

[3]

(b) A uniform electric field is now applied in the same region as the magnetic field.

The electron passes undeviated through the region of the two fields, as illustrated in Fig. 9.2.

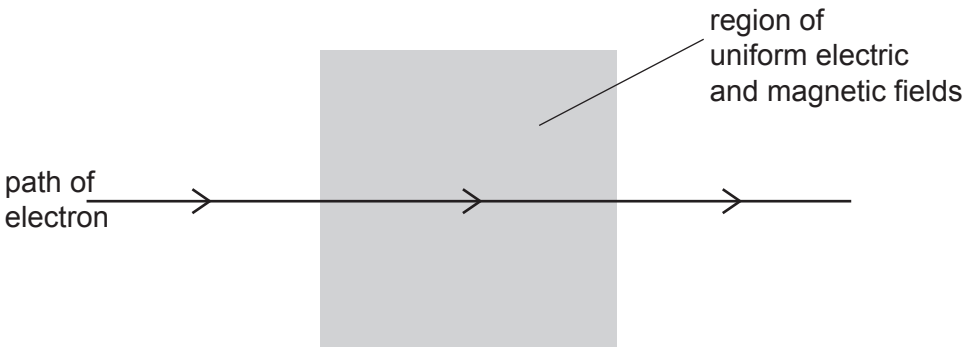

Fig. 9.2

(i) On Fig. 9.2, mark with an arrow the direction of the uniform electric field. [1]

(ii) Use data from **(a)** to calculate the magnitude of the electric field strength.

field strength = ... NC^{-1} [2]

(c) The electron in **(b)** is now replaced by an α-particle travelling at the same speed v along the same initial path as the electron.

Describe and explain the shape of the path in the region of the magnetic and electric fields.

.....

.....

..... [2]

[Total: 10]

© UCLES 2020

10 (a) State Faraday's law of electromagnetic induction.

.....

.....

..... [2]

(b) A simple iron-cored transformer is illustrated in Fig. 10.1.

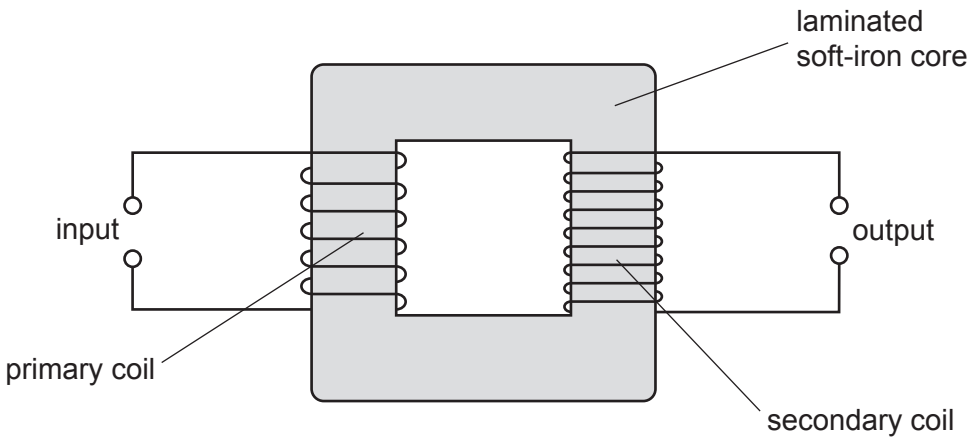

Fig. 10.1

(i) State **one** function of a transformer.

.....

..... [1]

(ii) A sinusoidal alternating current in the primary coil gives rise to a varying magnetic flux linking the secondary coil.

Use Faraday's law to explain why the output from the transformer is an electromotive force (e.m.f.) that is alternating.

.....

.....

.....

.....

..... [3]

(iii) State why the soft-iron core of the transformer is laminated.

.....

..... [1]

[Total: 7]

© UCLES 2020

11 (a) The uppermost energy bands in a solid are known as the valence band (VB), the forbidden band (FB) and the conduction band (CB).

A copper wire is at room temperature.

Use band theory to explain why the resistance of the copper wire increases as its temperature increases.

.....

.....

.....

.....

.....

.....

..... [4]

(b) The structure of a copper crystal is to be examined using electron diffraction.

Electrons, having been accelerated from rest through a potential difference V, are incident on the crystal.

The de Broglie wavelength λ of the electrons is 2.6×10^{-11} m.

Calculate the accelerating potential difference V.

V = ... V [4]

[Total: 8]

12 (a) State what is meant by the *mass defect* of a nucleus.

.....

.....

..... [2]

(b) Some masses are shown in Table 12.1.

Table 12.1

	mass / u
proton $^{1}_{1}p$	1.007 276
neutron $^{1}_{0}n$	1.008 665
helium-4 ($^{4}_{2}He$) nucleus	4.001 506

Show that:

(i) the energy equivalence of 1.00 u is 934 MeV

[2]

(ii) the binding energy per nucleon of a helium-4 nucleus is 7.09 MeV.

[2]

(c) Isotopes of hydrogen have binding energies per nucleon of less than 3 MeV.

Suggest why a nucleus of helium-4 does not spontaneously break down to become nuclei of hydrogen.

.....

.....

..... [2]

[Total: 8]

To avoid the issue of disclosure of answer-related information to candidates, all copyright acknowledgements are reproduced online in the Cambridge Assessment International Education Copyright Acknowledgements Booklet. This is produced for each series of examinations and is freely available to download at www.cambridgeinternational.org after the live examination series.

© UCLES 2020